Delco-Remy
ANDERSON, INDIANA, U.S.A.
SERVICE BULLETIN

Bulletin 1G-150
Date 7-3-61
10 Pages Page 1
File Under:
G-GENERATORS

Supersedes Bulletin 1G-150
Dated 3-24-53

ADJUSTMENTS, TESTS AND MAINTENANCE OF
D.C. GENERATORS

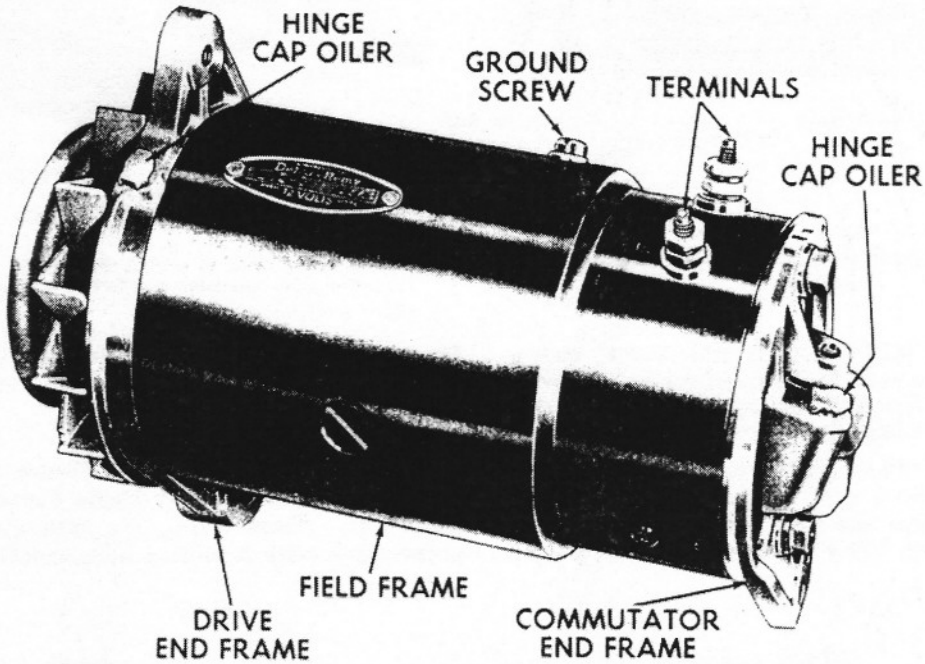

Figure 1—Typical D.C. Generator.

INTRODUCTION

Delco-Remy d.c. generators are manufactured in a wide range of sizes and types, but the basic design of each generator is the same. Regardless of size, each generator has an armature mounted at both ends on bearings. The armature rotates between pole shoes over which are wound field coils. The voltage and current developed in the armature windings is supplied through brushes riding on a commutator to the generator terminals, and then to the battery and other electrical accessories in the circuit. Since all d.c. generators adhere to the same basic design, the maintenance and testing procedures for all sizes are similar. A typical generator is shown in Figure 1.

This bulletin covers the different types and designs of d.c. generators along with recommended service procedures for each. The subject of Operating Principles is covered in Delco-Remy Training Chart Manual DR-5133E.

TYPES AND DESIGNS

The following cross sectional views illustrate the various types of generators manufactured by Delco-Remy.

The extruded frame two-brush two-pole type of generator shown in Figure 2 has a frame diameter size of 4⅝ inches. Each end frame has hinge cap oilers for periodic lubrication, and the commutator end frame features a bronze bushing and an oil reservoir. Continuous lubrication to the bushing and shaft is provided by a wick which extends through a hole in the bushing to contact the shaft. A special version in the 4⅝ inch frame diameter size is the generator shown in Figure 3. This assembly features a blast tube for forced air cooling, and sealed ball bearings in each end frame which are lubricated for the life of the bearing.

The generator shown in Figure 4 has a frame diameter size of 5⅛ inches. It features ball bearings

D.C. GENERATORS

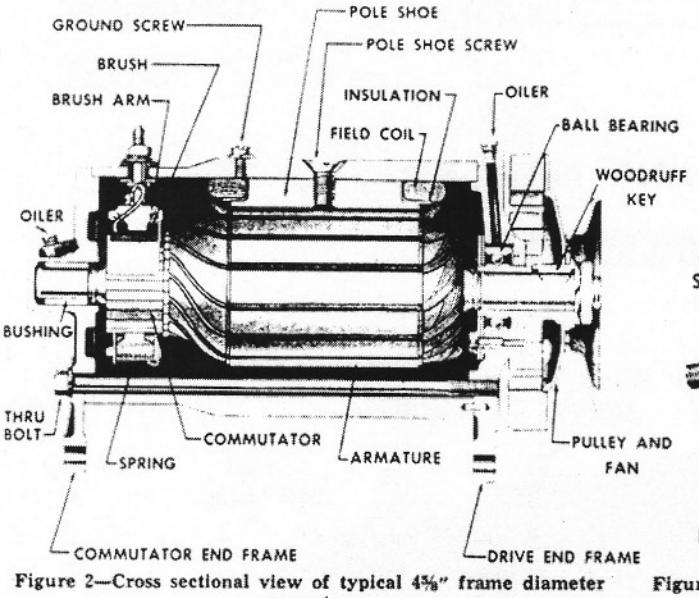

Figure 2—Cross sectional view of typical 4⅝" frame diameter generator.

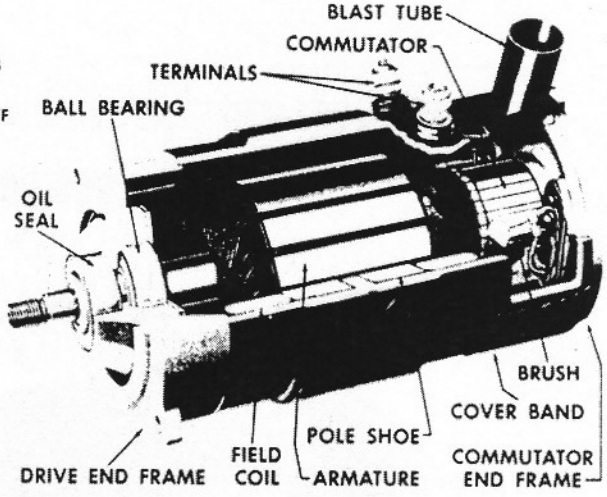

Figure 3—Cutaway view of typical 4⅝" frame diameter generator with provision for forced air cooling.

and hinge cap oilers in each end frame, and a cover band which can be removed for easy inspection of the brushes and commutator. This generator is of the two-brush two-pole type.

In Figure 5 is illustrated a two-brush two-pole generator which is similar in construction but larger in size than the assembly shown in Figure 4. This generator has a frame diameter of 5⅝ or 5¾ inches and a cover band that can be removed to permit easy inspection of the brushes and commutator.

The generator illustrated in Figure 6 has two brushes, two poles, and a frame diameter size of 5⅝ or 5¾ inches. This type generator features grease reservoirs providing permanent-type lubri-

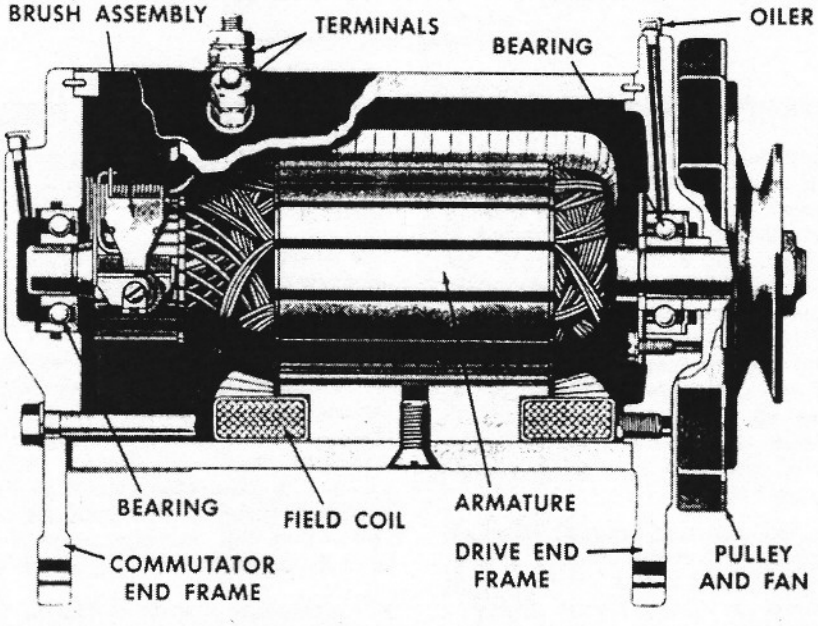

Figure 4—Cross sectional view of typical 5⅛" frame diameter generator.

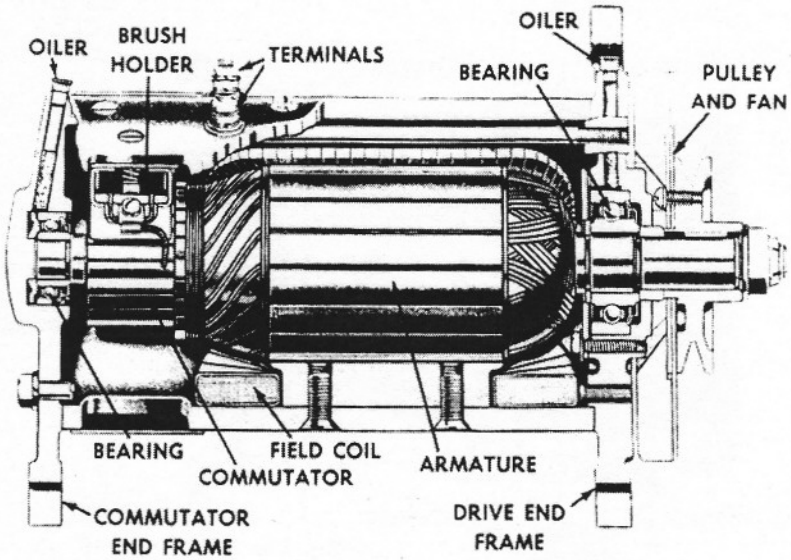

Figure 5—Cross sectional view of typical generator having frame diameter of 5⅝" or 5¾".

cation, and extra long brushes with special constant-tension brush springs. These design features eliminate the need for periodic lubrication and brush replacement between engine overhaul periods. Cover plates which are mounted over windows in the field frame can be easily removed for inspection of the brushes and commutator.

The assembly shown in Figure 7 has a frame diameter size of $6\frac{1}{16}$ inches. The ball bearings in each end frame in this generator are sealed for life, and no periodic generator lubrication is required. Generators in this frame size have four poles, and some models have two brushes whereas others have four brushes.

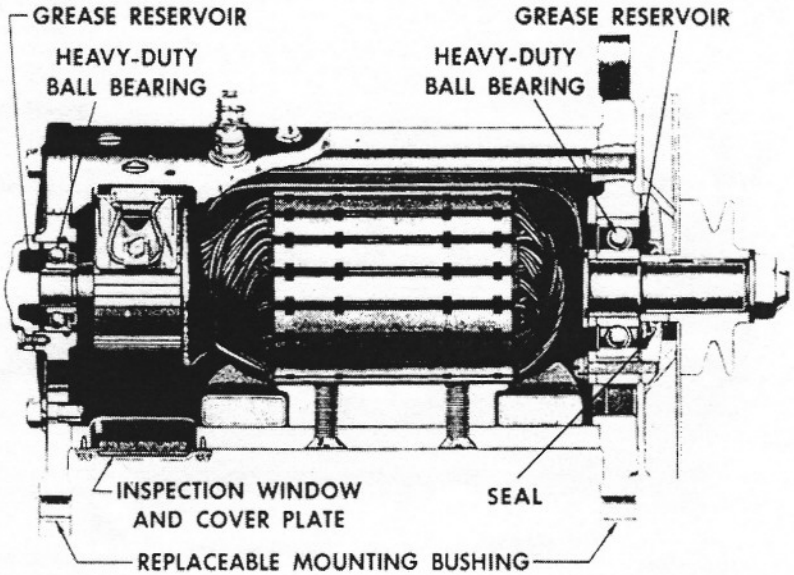

Figure 6—Cross sectional view of 5⅝" or 5¾" frame diameter generator with special brushes and permanent bearing lubrication.

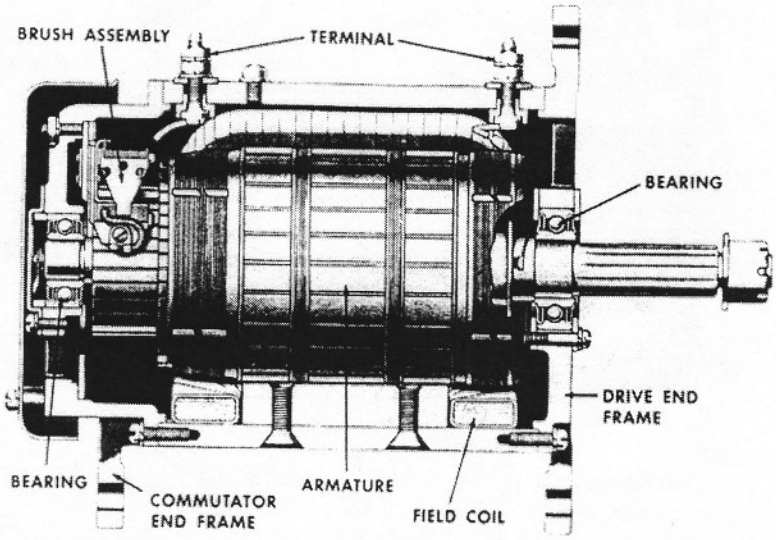

Figure 7—Cross sectional view of typical $6\frac{1}{16}$" frame diameter generator.

The generator illustrated in Figure 8 is a four-brush four-pole unit having a frame diameter of $6\frac{9}{16}$ inches. On this type generator, a roller bearing is used in the drive end frame, and a ball bearing in the commutator end frame. The inner race of the ball bearing is secured to the shaft with a nut threaded over the shaft at the commutator end. Grease cups are used on each end frame for periodic lubrication.

The assembly in Figure 9 has four brushes and four poles and a frame diameter of $8\frac{3}{16}$ inches. On some models the four field coils are connected in series, and in other models a split field arrangement is used as shown in Figure 17. Provision is made on the commutator end frame for attachment of a filter screen to remove dust, dirt, and other foreign material from the cooling air drawn

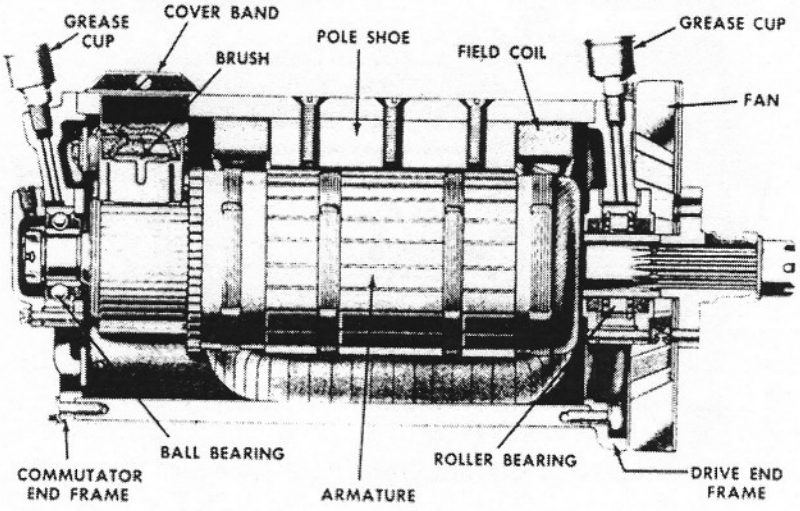

Figure 8—Cross sectional view of typical $6\frac{9}{16}$" frame diameter generator.

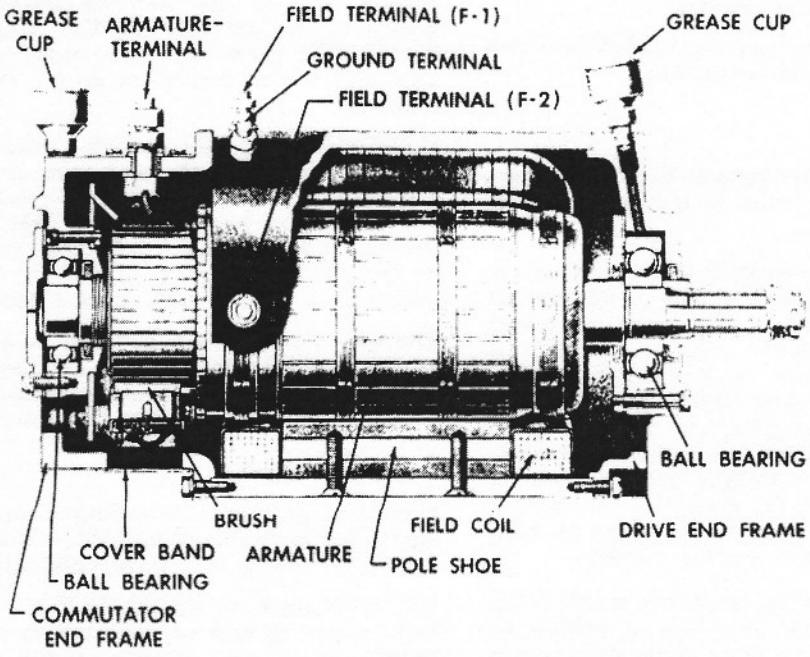

Figure 9—Cross sectional view of typical $8\frac{9}{16}$" frame diameter generator with split fields.

through the generator by the fan. Ball bearings are used in each end frame, and lubrication is provided by grease cups.

The generator shown in Figure 10 is also of the $8\frac{9}{16}$ inch frame diameter type, but the frame length is shorter as compared to the assembly pictured in Figure 9. This type generator also has grease cups and a filter cover, but uses a roller bearing in the drive end frame with a ball bearing in the commutator end frame. This type assembly features six brushes and six poles, along with three interpoles connected in series with each other. (See Figure 15.)

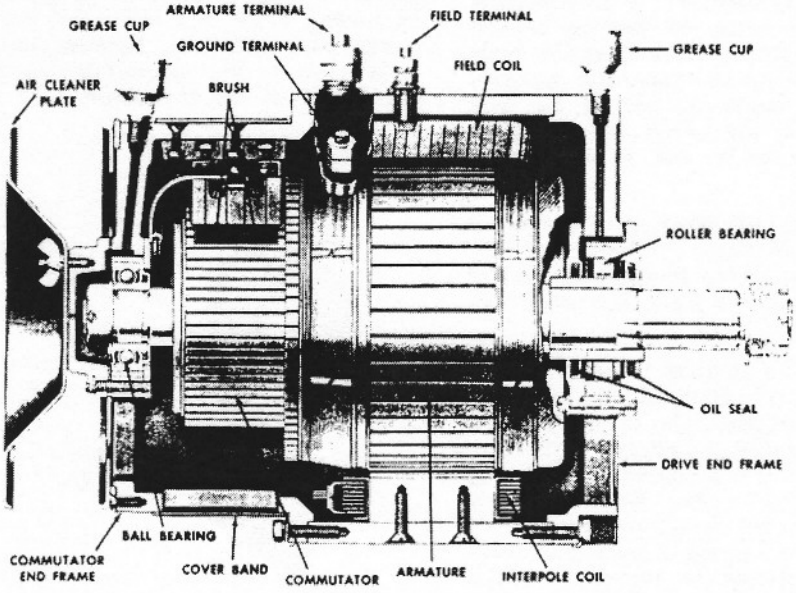

Figure 10—Cross sectional view of typical $8\frac{9}{16}$" frame diameter generator having six poles.

MAINTENANCE

Maintenance procedures may be divided into two sections—Lubrication and Inspection.

Lubrication

It is very important that proper lubrication procedures be followed in order to obtain maximum life from the generator.

All bearings used in generators use grease to retain the oil which bleeds to the bearing surfaces to provide proper lubrication. On some generator models hinge cap oilers are used so that the oil supply in the grease can be replenished. Other models feature grease cups which permit direct application of additional grease to the bearing as the original supply becomes exhausted. Some generators contain a built-in reserve supply of grease in a reservoir located in the generator end frame, and others use bearings which are sealed on both sides to retain the original grease supply.

On generators having hinge cap oilers, a few drops of SAE No. 20 oil should be added at vehicle or engine lubrication periods. Generators with grease cups should have the grease cups turned down one full turn at vehicle or engine lubrication periods. Generators having sealed bearings, and those with grease reservoirs in the end frames, require no periodic lubrication, and are designed to operate between engine or generator overhaul periods without lubrication attention.

There are two types of grease recommended for bearings in d.c. generators. For generators of the type shown in Figures 2 and 4, any high grade grease of reputable manufacture is satisfactory. On these types of generators, the bearing should be refilled only one-quarter full, so that the balls are completely covered but the separator remains exposed. *Also grease reservoirs should be only half filled with grease* so that when the generator is reassembled, the reservoir will be only half-filled.

CAUTION: *Overfilling will cause the bearing to overheat, resulting in premature failure. Keep lubricants perfectly clean, as the smallest amount of dirt or other foreign matter in a bearing will cause premature failure.*

For other d.c. generators such as those shown in Figures 5, 6, 8, 9 and 10, Delco-Remy lubricant No. 1948791 is recommended. *On these types of generators, the bearing may be reused if the service mileage is low and if a reasonable amount of the grease supply in the bearing remains,* and if the bearing is otherwise not defective. However, if the grease supply in the bearing is nearly or completely exhausted, it should be replaced with a new bearing. CAUTION: *Do not add grease to a bearing used on these types of generators. Always replace with a new bearing instead of adding grease to the old bearing.* On these generators, No. 1948791 grease may be added to the grease cups and to the reservoirs in the end frames as required.

CAUTION: *Add only enough grease to the reservoirs so that when the generator is reassembled, the reservoir will be only half-filled. Overfilling will cause the bearing to overheat, resulting in premature failure. Keep lubricants perfectly clean, as the smallest amount of dirt or other foreign matter in a bearing will cause premature failure.*

The generators shown in Figures 3 and 7 have sealed bearings. On this type of assembly, no periodic lubrication is required, and the bearings should be replaced at engine overhaul periods.

Inspection

Inspection procedures are limited mostly to visual checks for loose mounting bolts, a loose drive belt, damaged wiring, and worn commutator brushes.

All mounting bolts should be kept tight, and the belt tension should be adjusted to conform with engine or vehicle manufacturer's recommendations.

Wiring with frayed insulation should be replaced, and all connections should be checked for tightness and cleanliness.

If the commutator is dirty, it may be cleaned with No. 00 sandpaper, or with a brush seating stone, with the generator in operation. Blow away all dust after the cleaning operation. If the commutator is rough, out of round, or has high mica, the armature must be removed so the commutator can be turned down in a lathe and the insulation between bars undercut. Remove only enough material to make the commutator smooth and round, and undercut the insulation 1/32 inch deep and

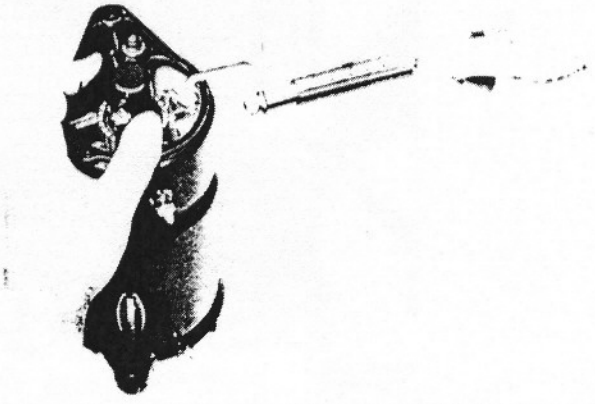

Figure 11—Measuring brush spring tension on generators of the type shown in Figure 1.

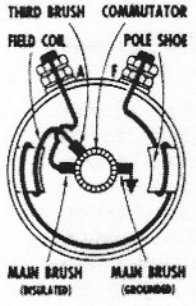

Figure 12

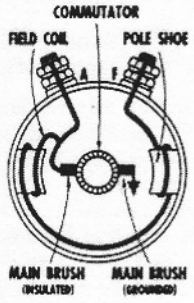

Figure 13

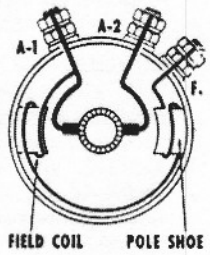

Figure 14

.033 inch wide. Finish with No. 00 sandpaper, and blow away all dust, particularly between bars.

If the brushes are worn down to less than half their original length, they should be replaced. New brushes can be seated to make good contact with the commutator by holding a brush seating stone on the commutator with the generator in operation or by applying brush seating compound to the commutator. Blow away all dust after the seating operation.

A visual inspection will often reveal the condition of the brush springs. If the springs are corroded, or if they are blued and discolored from excessive heat, they should be replaced. If the brush arms move freely, and if the brush moves freely in the holder, with no spring corrosion or discoloration, the springs most likely are satisfactory. If an additional check is desired, use a spring tension scale to measure the brush spring tension, and compare with specifications given in Bulletins 1G-180, 1G-185 and 1G-186. The method of checking the spring tension on generators of the type shown in Figure 1 is illustrated in Figure 11. The spring gauge should be hooked under the brush arm where it contacts the brush, and the reading taken when the brush arm first starts to move off the brush.

GENERATOR CIRCUITS

The main types of generator circuits are shown in Figures 12 through 17.

The third-brush generator circuit is shown in Figure 12. This type of circuit arrangement provides automatic control of the generator output, thereby eliminating in most cases the need for a voltage regulator control. However, this type of generator is limited to applications requiring lower current outputs.

The shunt type generator circuit shown in Figure 13 requires a voltage and current regulator for output control, and this generator is used in a wide variety of applications having low to moderate current output requirements.

The insulated generator circuit (Fig. 14) has both brushes connected to terminals on the generator frame. This type generator is used with a wire return from the battery and other accessories, in place of using the vehicle frame and engine block as the return circuit.

The generator circuit shown in Figure 15 has interpole windings which minimize distortion of the magnetic fields at different generator outputs. While distortion of the magnetic fields is normal, this type of generator supplies such high current outputs that the distortion would be excessive, causing poor commutation and short brush life. The interpole windings reduce distortion and assure good brush life.

The generator circuit shown in Figure 16 has a bucking field coil which is connected across the generator armature. The magnetism produced by the bucking field coil opposes the magnetism created by the main field coil. On generators of this type, only a small amount of magnetism is needed at high generator speeds for the generator to produce specified voltage. Since the main field magnetism and bucking field magnetism oppose each other, the current through both of these windings remains at a normal level at high speeds, but the opposing effect results in the small magnetic field needed at these speeds. With the normal amount of current in the main field windings at high speeds, the regulator is able to retain voltage control. Without the bucking field, the main field current would have to decrease to an abnormally low value at high speeds. At such a low value, the regulator would not be able to control the voltage.

The split field generator circuit (Fig. 17) consists of two separate sets of field coils. Each set is individually controlled by separate voltage and cur-

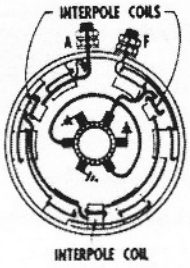

Figure 15

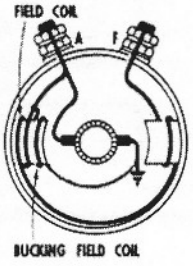

Figure 16

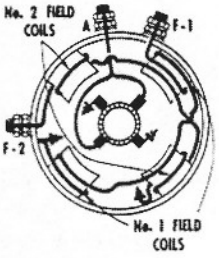

Figure 17

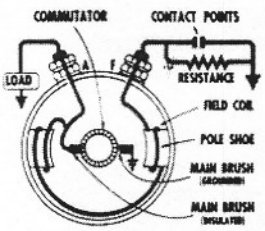

Figure 18—"A" circuit generator.

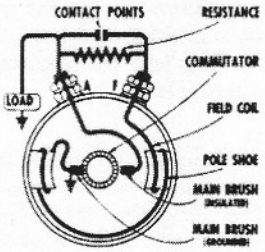

Figure 19—"B" circuit generator.

rent regulators. On this type of generator, high current outputs are obtained at engine idle speed. For a more detailed description of the generator circuits shown above, see the Delco-Remy Training Chart Manual DR-5133E.

"A" Circuit and "B" Circuit—The generator circuits shown in Figures 12 through 17 can be classified as either "A" circuit or "B" circuit. An "A" circuit generator is shown in Figure 18. In this type circuit, the field winding is connected to the insulated brush inside the generator and is connected to ground through the contact points in the regulator. In the "B" circuit generator (Fig. 19), the field winding is grounded inside the generator, and is connected to the armature circuit inside the regulator.

The insulated generator circuit shown in Figure 14 may be used either as an "A" circuit or "B" circuit generator. If the "A1" terminal is connected to the regulator, and the "A2" terminal is grounded or connected to the battery return circuit, the generator becomes an "A" circuit type. If the "A2" terminal is connected to the regulator, and the "A1" terminal is grounded or connected to the battery return circuit, the generator becomes a "B" circuit type.

The type of circuit for each generator model is listed in the Test Specification Bulletins 1G-180, 1G-185, and 1G-186.

OUTPUT CHECKS

(Refer to Service Bulletins 1G-180, 1G-185 and 1G-186 for Specifications)

To check the generator for electrical output, connect an ammeter in series with a battery to the generator output terminal. Also connect a voltmeter from the generator output terminal to ground, and a load rheostat across the battery. Refer to the above Service Bulletins to determine if the generator is "A" circuit or "B" circuit. Then connect a jumper lead to the generator field terminal as shown in Figure 20 for "A" circuits, and as shown in Figure 21 for "B" circuits. *Operate the generator at specified speed,* and adjust the load rheostat as required to obtain the specified output.

If the generator does not perform according to specifications, it should be disassembled for further testing.

DISASSEMBLY

Generator disassembly can be accomplished first by removing the thru-bolts, or end frame attaching bolts, and then separating the two end frame assemblies from the field frame. On some models, it is necessary to detach leads from the brush holders before the commutator end frame can be removed. Also, on generators of the type shown in Figure 8, the commutator end frame retainer plate, and the cotter pin and nut on the shaft, must be removed before the end frame can be separated from the field frame.

When removing bearings from the armature shaft or end frame, care should be taken to avoid damage to the balls and raceways. If the bearing is a press fit over the shaft, use bearing pullers against the inner race only. If the inner race is inaccessible, and it is necessary to pull against the outer race, the balls will be loaded and may be damaged. Similarly, when removing a bearing whose outer race is a press fit into the end frame, use an arbor press against the outer race to avoid loading the balls.

After bearing removal, wash in a clean solvent, and carefully inspect for worn surfaces, looseness, broken separators, a cracked ring or race, and a rough or catchy feeling. Always replace any bearing if its condition is doubtful.

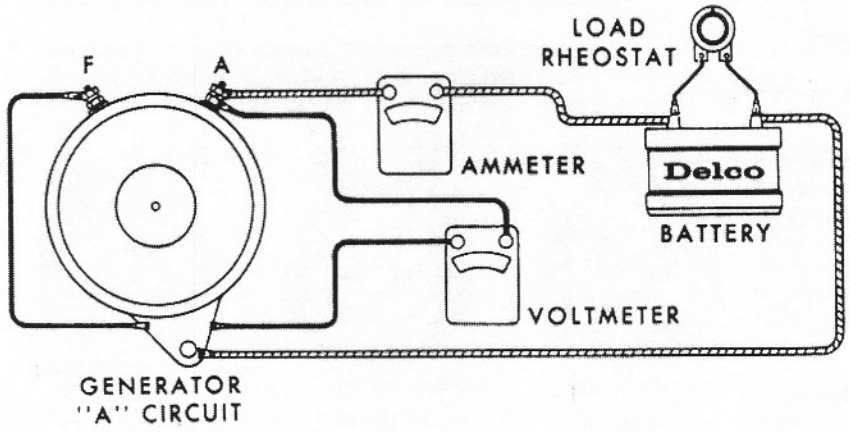

Figure 20—Connections for checking output on "A" circuit generators.

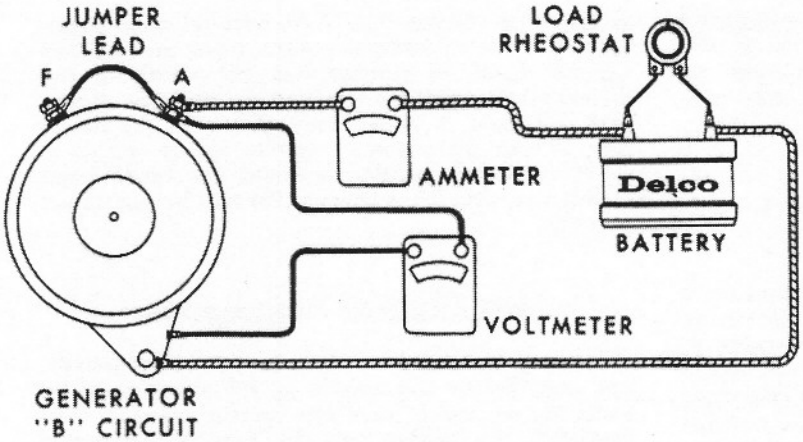

Figure 21—Connections for checking output on "B" circuit generators.

IMPORTANT—*Refer to the section entitled "MAINTENANCE" for proper lubrication procedures.*

When remounting bearings, use an arbor press and press firmly and evenly against the proper race to avoid loading the balls. If the mounting surfaces are clean, and the bearing is started properly and is not cocked or mis-aligned, it can be mounted without undue pressure.

Grease and oil seals should be replaced after appreciable mileage, or if the seal is worn or damaged in any way.

ELECTRICAL TESTS

After the generator has been disassembled, tests can be made of the armature and field coils to determine any electrical defects.

The armature should be checked for shorts, grounds, and opens. To check for shorts, place the armature in a growler, and slowly rotate with a metal blade held on the armature. If the metal blade vibrates, the windings are shorted.

To check the armature for grounds, touch one prod of a 110 volt test lamp to the commutator, and the other test lamp prod to the shaft or laminations. If the lamp lights, the windings are grounded.

To check the armature for opens, visually inspect the wiring connections to the commutator bars, and inspect the commutator for a burned or discolored commutator bar. An open circuit will cause one of the bars to burn and become discolored. Also, the armature may be checked for opens on a growler meter. If the meter reads low, the winding connected to the commutator bars to which the prods are connected is open.

The generator field windings should be checked for shorts, grounds and opens. To check for shorts, connect an ammeter and battery in series with the field windings, and refer to Service Bulletins 1G-180, 1G-185, and 1G-186 for specifications. If the current reading is higher than specified, the windings are shorted.

To check the field windings for grounds, connect one prod of a 110 volt test lamp to the field terminal, and the other prod to the generator frame. If the lamp lights, the windings are grounded. On "B" circuit generators, the ground lead must be detached from the frame when checking for grounded fields.

To check the field windings for opens, connect the 110 volt test lamp prods across the windings. If the lamp fails to light, the windings are open.

A shorted, grounded, or open field will result in abnormal generator output. A shorted field winding will cause excessive burning of the voltage regulator contact points, resulting in reduced generator output. An open field winding will result in no generator output. A grounded field can cause excessive generator output on "A" circuit generators, if the ground is near the "F" terminal. If the ground is near the end of the winding connected to the insulated brush, reduced generator output will be obtained. On "B" circuit generators, a grounded field will cause excessive pitting and burning of the voltage regulator contact points, resulting in reduced generator output.

On "bucking field" generators (Fig. 7), a shorted, grounded, or open bucking field winding can cause excessive generator voltage at high speeds.

REASSEMBLY

Reassembly is the reverse of disassembly. Care should be taken to avoid damage to grease seals and oil seals during reassembly, and the brushes should be checked after reassembly to make sure they are free in their holders and the brush arms move freely.

THIRD BRUSH ADJUSTMENT

On some generators, the third brush location can be adjusted by loosening the third brush ring clamping screws, and then moving the third brush in the direction of rotation or in the opposite direction. Moving the brush in the direction of rotation

will increase generator output, and in the opposite direction will decrease generator output. If the battery remains consistently undercharged or overcharged, relocating the third brush may correct the condition.

CHECKING AND ADJUSTING NEUTRAL POINT

Many of the higher output shunt generators have adjustable brush plates which can be shifted to obtain the proper brush locations with respect to the neutral point. Proper adjustment is necessary in order to obtain best commutation and therefore maximum brush and commutator life. The neutral point refers to a particular relationship between the poles, armature windings and brushes. When the relationship of these parts is correct, minimum arcing and best commutation will be obtained. Whenever new brushes, armature, or poles are installed, or whenever a generator has been disassembled, the brush position must be checked and adjusted as follows:

With the generator assembled and the brush ring attaching screws just tight enough to hold the brush ring in place in the commutator end frame, connect a battery between the generator "A" terminal and ground (or between the "A1" and "A2" terminals on insulated units) and note the tendency for the armature to rotate. The generator should be on a test bench with the armature free to rotate and without any connection to the generator field terminal. The voltage to use in making this check is the minimum amount of voltage which will cause the armature to rotate when it is free to turn. This voltage may be obtained by connecting a variable resistance into the circuit from the battery. The neutral point is found by shifting the brushes into the position at which there is no tendency for the armature to rotate in either direction. If the generator has interpoles the brush setting must be exactly on the neutral point. Generators without interpoles must have the brushes shifted ahead ¼ commutator bar width in the direction of armature rotation so that the armature will tend to rotate very slowly in the direction of the generator's normal driven rotation. After the brush position is found, the brush plate locking or attaching screws should be tightened securely.

POLARIZING GENERATOR

After a generator has been tested and repaired, and installed on the engine or vehicle, it must be polarized so it will have the correct polarity with respect to the battery polarity. Failure to polarize the generator may result in burned or stuck cutout relay contacts in the regulator, along with damage to the wiring and generator windings.

"A" Circuit Generator—To polarize an "A" circuit generator, momentarily connect a jumper lead between the regulator BATTERY and ARMATURE terminals after all leads have been connected, but before the engine is started. If the generator is a 24 or 32 volt unit, temporarily insulate the ground brush or brushes from the commutator to avoid excessive current through the armature. The brushes can be temporarily insulated from the commutator with a piece of cardboard or other suitable insulating material.

"B" Circuit Generator—To polarize a "B" circuit generator, disconnect the lead from the regulator FIELD terminal, and momentarily touch the lead to the regulator BATTERY terminal. This should be done after all other leads have been connected and before the engine is started.

Polarizing the generator allows a surge of current to flow through the field windings, which insures that the polarity of the generator will match the polarity of the battery.